Spec Sheet of G84701-1

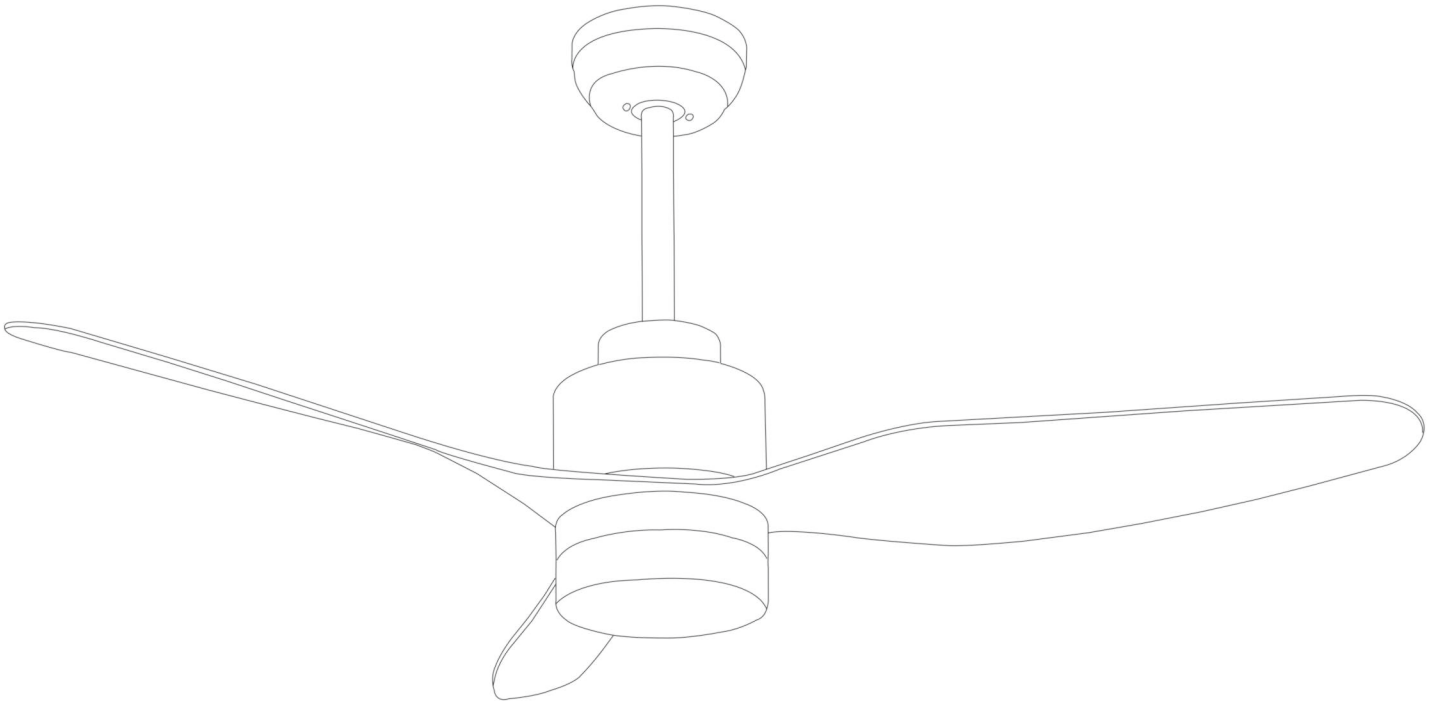

USE AND CARE GUIDE

47-INCH CEILING FAN

01 Safety Information

1、To reduce the risk or electrical shock the electricity has been turned off at the circuit breaker or fuse box before begin.

2、All wiring must be in accordance with the National Electrical Code NASI/NFPA 70 -1999 and local electrical codes. Electrical installion should be performed by a qualified licensed electrician .

3、The outlet box and support structure must be securely mounted and capable of reliably supporting 35ib.(15.9kg).Use only UL listed outlet boxes marked “Acceptable for Fan Support of 35ibs(15.9kg)or less.”

4、The fan must be mounted with a minimum of 7 ft. (2m) clearance from the trailing edge of the blades to the floor.

5、Do not operate the reversing switch while the fan blades are in motion. You must turn the fan off and stop the blades before you reverse the blade direction.

6、Do not place objects in the path of the blades.

7、To avoid personal injury or damage to the fan and other items use caution when working around or cleaning the fan.

8、Electrical diagrams are for reference only. Light kits that are not packed with the fan must be UL-listed and marked suitable for use with the model fan you are installing. Switches must be UL General Use Switches. Refer to the instructions packaged with the light kits and switches for proper assembly.

9、After making electrical connections , spliced conductors should be turned upward and pushed carefully up into tne outlet box.The wires should be spread apart with the grounded conductor and the equipment-grounding conductor on one side of the outlet box.

10、All setscrews must be checked and retightened where necessary before installation.

WARNING:TO reduce the risk of personal injury, do not bend the blade brackets (also referred to as flanges) during assembly or after installation.Do not insert objects in the path of the blades .

WARNING: Remove the rubber motor stops on the bottom of the fan before installing the blades or testing the motor.

WARNING: To reduce the risk or fire or electric shock,do not use this fan with any solid-state speed control device.

WARNING: To avoid possible electrical shock, turn the electricity off at the main fuse box before wiring.It you feel you do not have enough electrical wiring knowledge or experience, contact a licensed electrician.

WARNING: Electrical diagrams are for reference only. 0ptional use of any light kit shall be UL-listed and marked suitable for use with this fan.

WARNING: To reduce the risk of fire, electric shock, or personal injury. mount to outlet box marked" Acceptable for fan support of 35 ibs.(15.9 kg)or less." and use the screws provided with the outlet box.

02 Warranty

The supplier warrants the fan motor to be free from defects in workmanship and material present at time of shipment from the factory for a lifetime after the date of purchase by the original purchaser. The supplier also warrants that all other fan parts,excluding any glass or acrylic blades,to be free from defects in workmanship and material at the time of shipment from the factory for a period of one year after the date of purchase by the original purchaser. We agree to correct such defects without charge or at our option replace with a comparable or superior model if the product is returned. To obtain warranty service,you must present a copy of the receipts proof of purchase. All costs of removing and reinstalling the product are your responsibility. Damage to any part,such as by accident,misuse,improper installation or by affixing any accessories ,is not covered by this warranty. Because of varying climatic conditions this warranty does not cover any changes in brass finish ,including rusting,pitting,corroding,tarnishing or peeling. Brass finish of this type give their longest useful life when protected from varying weather conditions. A certain amount of “wobble”is normal and should not be consided a defect. Servicing performed by unauthorized persons shall render the warranty invalid. There is no other express warranty. hereby disclaims any and all warranties,including but not limited to those of merchantability and fitness for a particular purpose to the extent permitted by law. The durationof any impiled warranty which cannot be disclaimed is limited to the time period as specified in the express warranty. Some states do not allow a limitation on how long an implied warranty lasts,so the above limitation may not apply to you. The retailer shall not be liable for incidental,consequential,or special damages arising out of or in connection with product use or perforance except as may otherwise be accorded by law. Some states do not allow the exclusion of incidental or consequential damages,so the above exclusion or limitation may not apply to you. This warranty gives specific legal rights,and you may also have other rights which vary from state to state. This warranty supersedes all prior warranties.Shipping costs for any return of products as part of a claim on the warranty must be paid by the customer.

03 Pre-Installation

TOOLS REQUIRED

04 Pre-Installation(continued)

HARDWARE INCLUDED

components table

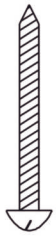

AA

BB

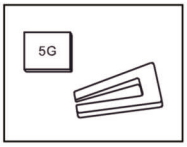

CC

DD

NOTE:Hardware not shown to actual size.

AA	**Mounting screws**	4
BB	**Expansion Bolts**	2
CC	**Balanced parts package**	1
DD	**Plastic wire nut(not to scale)**	5

PACKAGE CONTENTS

K	Remote control (Transmitter)	1

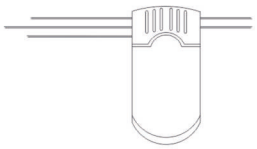

L	Remote control (receiver)	1

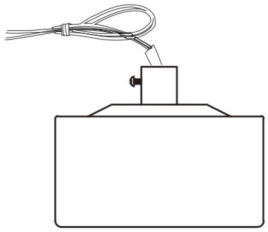

A	Fan-motor assembly	1

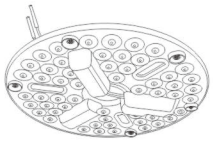

B	LED light kit	1

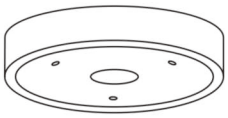

C	Light kit fitter assembly	1

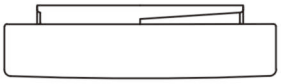

D	Lamp Cover	1

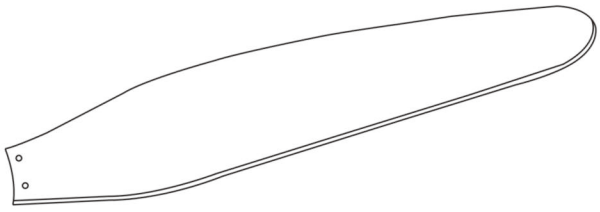

E	Blade	3

F	Slide-on mounting bracket (inside canopy)	1

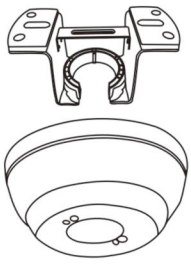

G	Canopy	1

H	12. 5CM Ball/downrod assembly	1

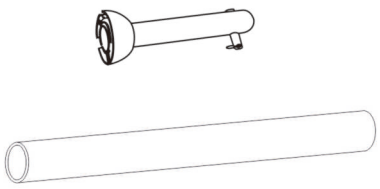

I	25CM Ball/downrod assembly	1

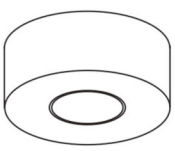

J	Coupling cover	1

05 Installation of the hanging brackert(suspension part)

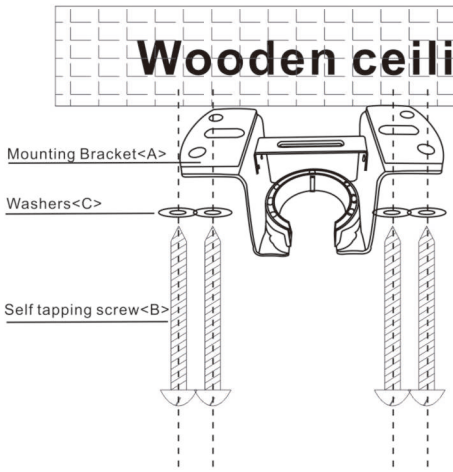

For wooden ceiling, use wood screw to drill on the wooden beam or the “junction box” to fix the hanging bracket (selection is made according to actual requirements of the customers).

STEP 1A-WOODEN CEILING

SWITCH OFF THE ELECTRICAL MAINS AT THE CIRCUIT BREAKER FUSE BOX.

1)Use the Mounting Bracket (A) as a guide, mark the spots where the 4 Self Tapping Screws (B) will be drilled.
2)Remove the Mounting Bracket (A), drill 4 holes for 3MM diameter, install the mounting bracket onto wooden ceiling with the 4 Self Tapping Screws (B) & Washers (C).

⚠ **IMPORTANT : SCREWS MUST BE TIGHTENED TILL SNUG**

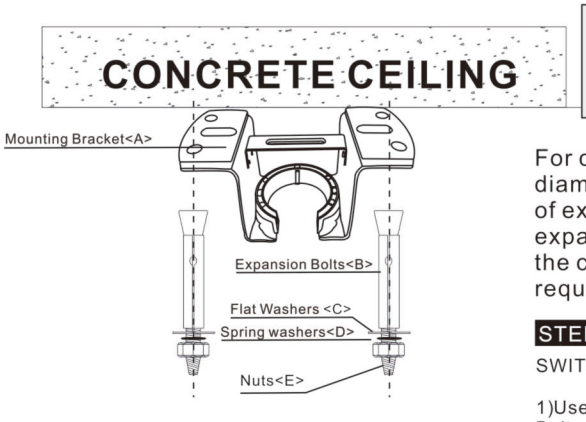

⚠ Note: According to the ceiling of different materials, use different screws to fix the hanging bracket. Don’t fix the hanging bracket on the wood ceiling less than 12MM to prevent danger caused by loosening of screws.
After the hanging bracket is completed, ensure that it can withstand the tension test of more than 68KG for safety.

For concrete ceiling, use the percussion bit with diameter 8mm to drill holes according to the length of expansion screws. Then use the attached expansion screws to fix the hanging bracket onto the ceiling (selection is made according to actual requirements of the customers).

STEP 2A－CONCRETE CEILING

SWITCH OFF THE ELECTRICAL MAINS AT THE CIRCUIT BREAKER FUSE BOX.

1)Use the Mounting Bracket (A) as a guide, mark the spots where the 4 Expansion Bolts (B) will be drilled.
2)Remove the Mounting Bracket (A), drill 4 holes and insert 4 Expansion Bolts (2) into the concrete ceiling, install the mounting bracket and secure with Flat Washers (C), Spring Washers (D) and Nuts (E).

IMPORTANT : SCREWS & NUTS MUST BE

⚠ **TIGHTENED TILL SNUG**

06 Install the hanging part of the ceiling fan.

1.INSTALL THE DOWNROD

ASSEMBLY INSTRUCTIONS

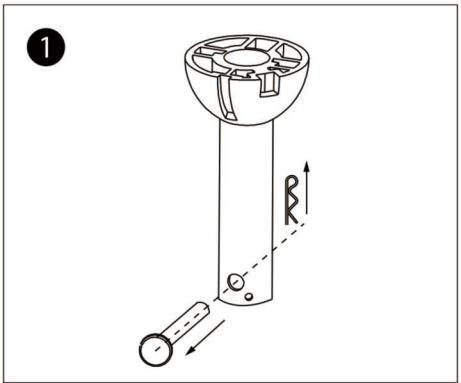

Remove the lock pin and the bolt of the base of the downrod.

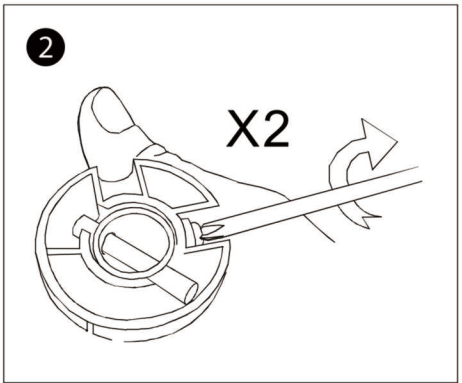

Unscrew the screws of the hanger ball.

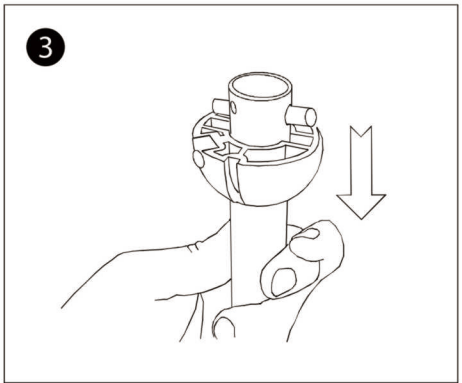

Slide the ball down the downrod.

4

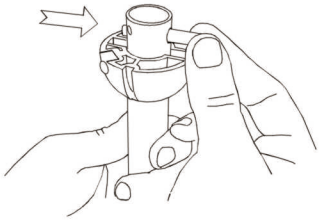

Remove the bolt of the downrod.

5

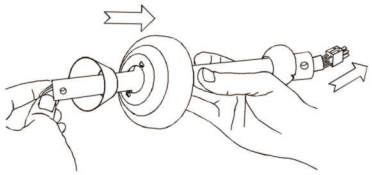

Insert on the downrod the canopy and the Bolt&Pin cover. Carefully feed motor wires throught the downrod assembly.

6

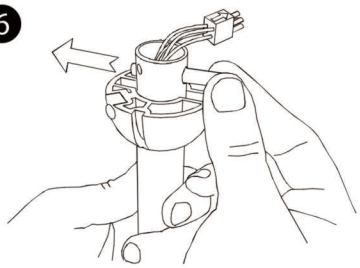

Replace the bolt of the hanger ball.

7

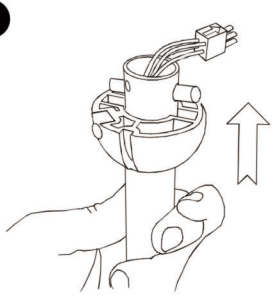

Replace the hanger ball at its normal position.

2. Install downrod assembly

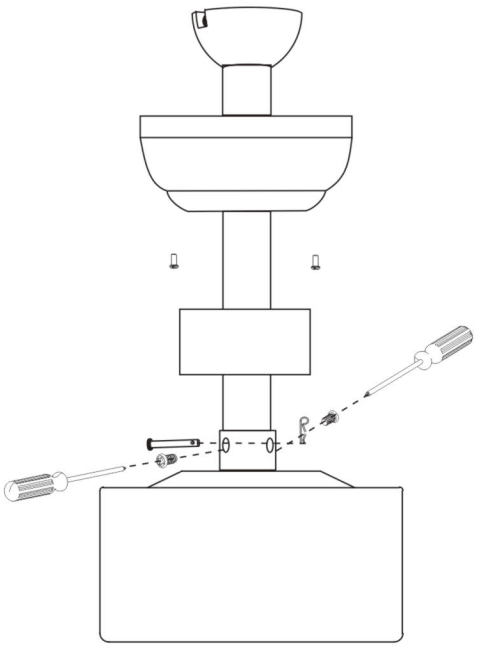

1. Thread the suspender through the suspended clock and coupling cover .
2. Then insert the tail of the suspender from the lifting head of the motor.
3. After the lateral pin is threaded out from the suspended head position, insert R type pin.
4. Tighten the lifting head screws.
5. Hang the fan of the hanging pipe into the hanger.

Phillips screwdriver

07 Assembly – Hanging the Fan(continued)

Preparing for mounting

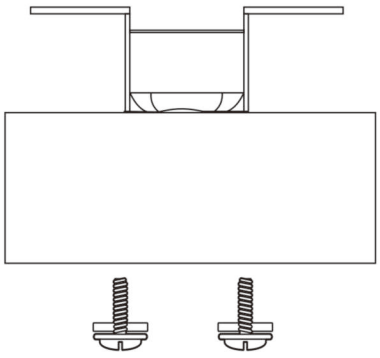

1.Remove the mounting bracket from the canopy by loosening the two canopy screws located in the L shaped slots.

2.Remove and save the two canopy screws in the round holes. This will enable you to remove the mounting bracket

Install remote control

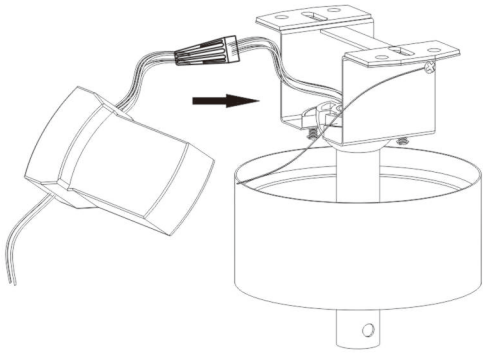

1.Carefully push the canopy to the bottom of the mounting bracket, make two sliding holes aligned to the two prominent screws on the mounting bracket, and then turn clockwise until tight.

2.Push the canopy ring to the bottom of the canopy, slide the inner holes aligned to the two prominent screws on the mounting bracket again, and turn the canopy ring clockwise until tight.

Preparing for mounting

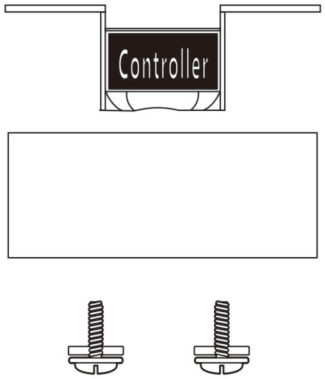

1.Remove the mounting bracket from the canopy by loosening the two canopy screws located in the L shaped slots.

2.Remove and save the two canopy screws in the round holes. This will enable you to remove the mounting bracket

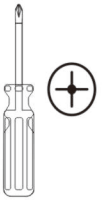

Phillips screwdriver

08 Assembly – Attaching the Fan Blades

1.Fastening the blade to the motor

NOTE:Your fan blades are reversible.Select the blade side finish which best accentuates your decor.

NOTE:Your fan features revolutionary advancements for quick and easy blade installation.Including an alignment post and captive blade arm screws.

WARNING:Remove the rubber motor stops on the bottom of the fan before installing the blades or testing the motor.

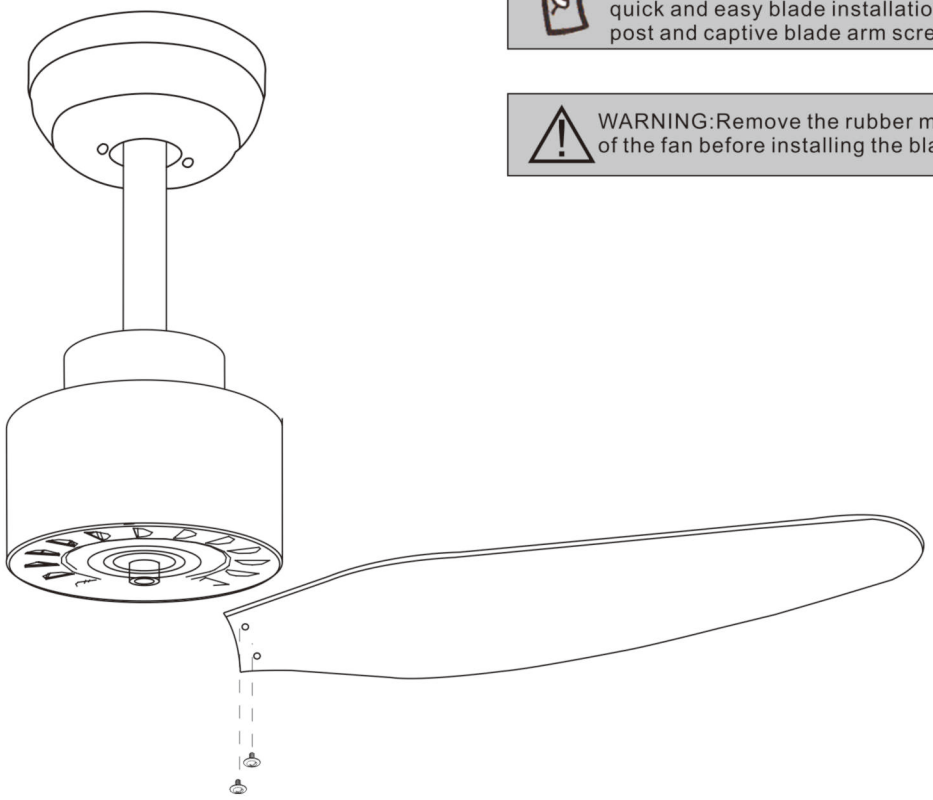

1.Fasten the Blade to the fan-motor assembly by inserting the alignment post into the slot on the bottom of the motor and tightening the pre-installed Blade screws.

2.Repeat this step for the remaining blade assemblies.

Phillips screwdriver

09 Assembly – Attaching the Lights

1.Connecting Lamp Pan

CAUTION:To reduce the risk of electric shock,disconnect the electrical circuit to the fa before installing the light fixture.

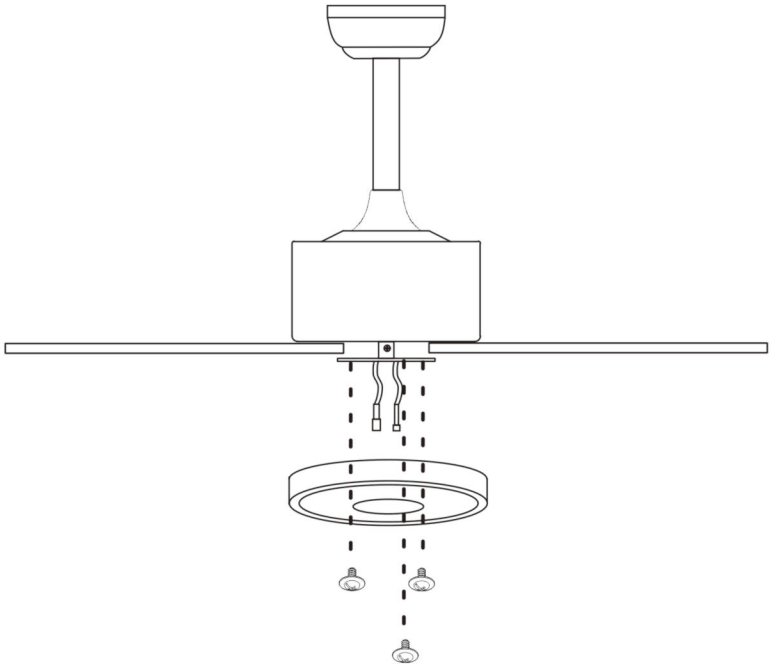

2.Connecting LED Light Kit.

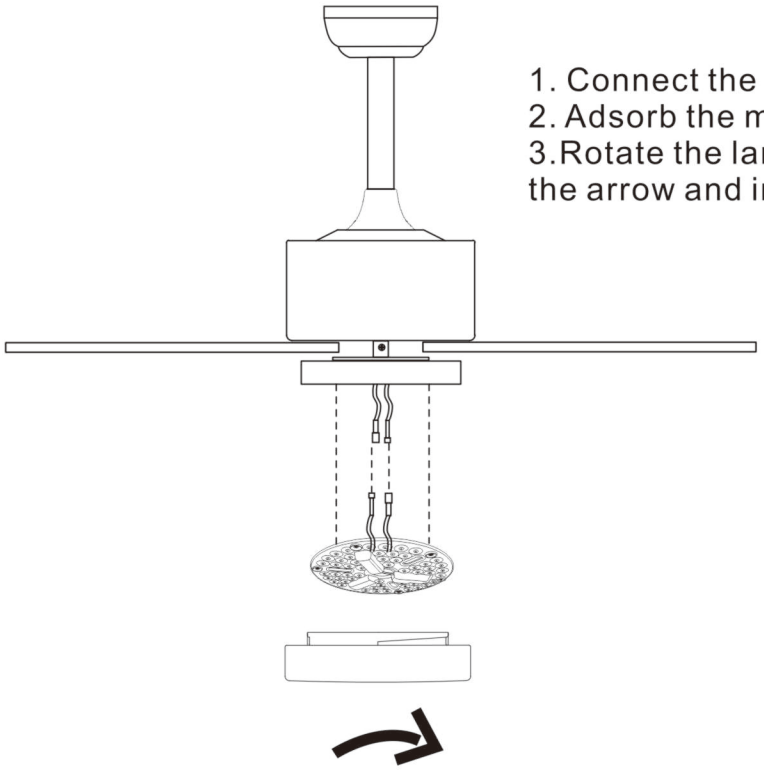

1. Connect the wires
2. Adsorb the magnet on the LED light kit into the lamp pan
3.Rotate the lampshade in the direction indicated by the arrow and install it on the lampshade

10) Use of remote control

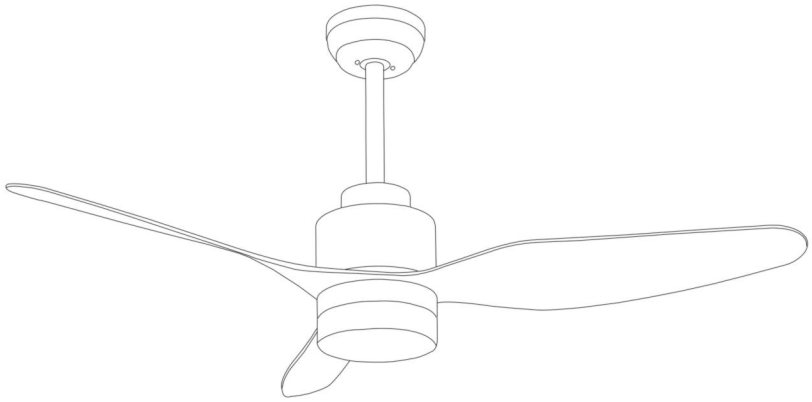

LIGHT NO/OFF — LIGHT NO/OFF

1H	Auto off after 1hr
2H	Auto off after 2hr
4H	Auto off after 4hr
8H	Auto off after 8hr

LOW	FanSpeed Low Level
MED	FanSpeed Middle Level
HI	FanSpeed High level
STOP	FanSTOP

11) Remote control wiring diagram

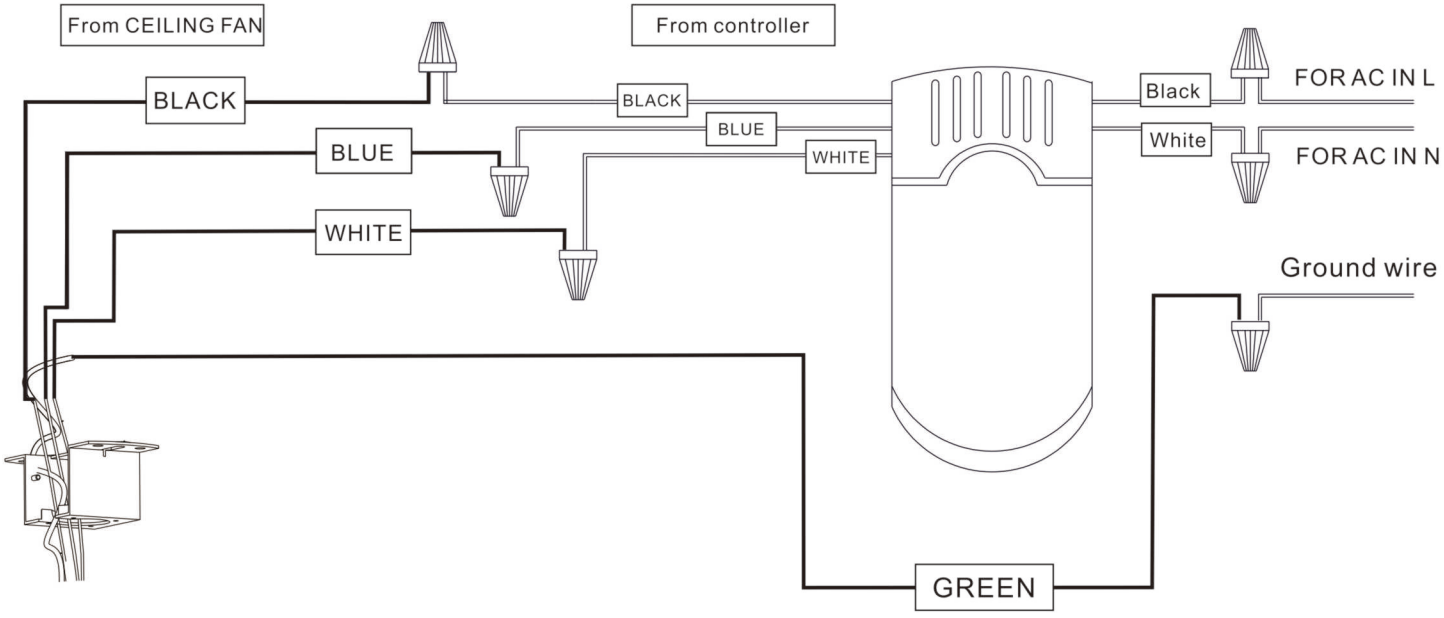

a.The motor **white** wire to the **white "TO MOTORN"** wire from Recevier with a wire nut.

b.The motor **black** wire to the **black"to motor L"** wire from Receiver with a wire nut.

c.The lamp **blue** wire to the **blue"to Light"** wire from Receiver with a wire nut.

d.The **white** wire from Outlet Box to the red**"AC in N"** wire from Receiver with a wire nut.

e.The **black** wire from Outlet Box to the red**"AC in L"** wire from Receiver with a wire nut.

Connect the supply ground wire to green ground wire from canopy and the green ground wire from the hanger bracket together using a wire nut.

Tuck all wire nuts and wires carefully up into the Outlet Box,EXCEPT antenna,which should remain outside Outlet Box

12 Fans Balance

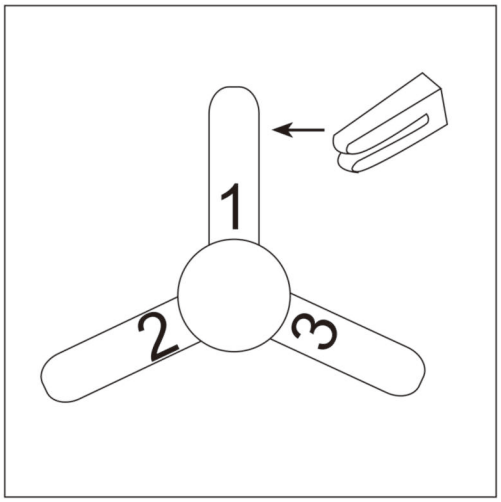

Put the clip in the center of a blade.
turn on the fan and if the shake persists, put the clip in another blade until the shake is reduced. Then this blade will need the counterweight.

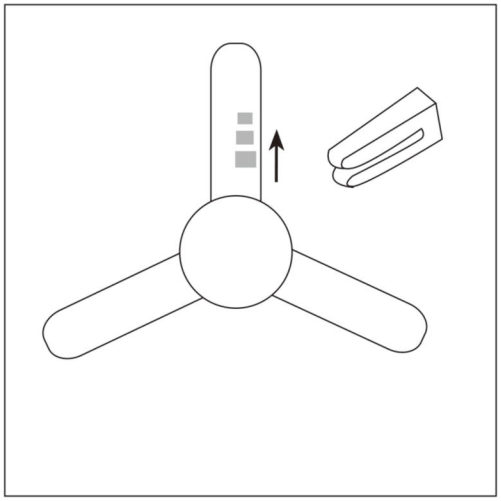

Place the clip on the blade that needs the counterweight and try the best place to place it, from the center to the tip of the blade, until the wobble disappears.

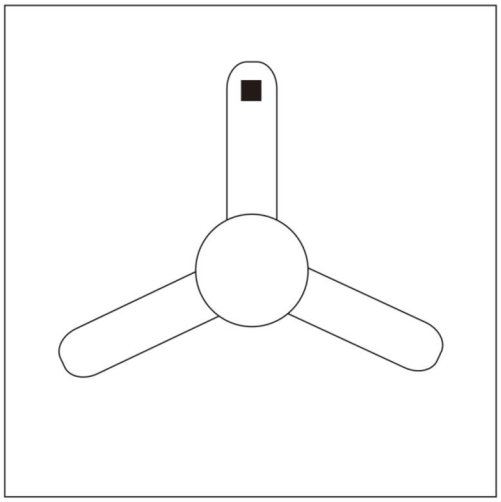

Paste the counterweight on the surface of the blade which near the clip, remove the clip and test the fan. If it keep staggering, put another counterweight. if it gets worse, try another better area to place it.
please try it patiently till the fan is balance.

13 Care and Cleaning

WARNING: Make sure the power is off before cleaning your fan.

☐ Because of the fan's natural movement, some connections may become loose.Check the support connections,brackets,and blade attachments twice a year. Make sure they are secure. It is not necessary to remove the fan from the ceiling.

☐ Clean your fan periodically to help maintain its new appearance over the years. Do not use water when cleaning, as this could damage the motor or the wood, or possibly cause an electrical shock. Use only a soft brush or lint-free cloth to avoid scratching the finish. The plathing is sealed with a lacquer to minimize discoloration or tarnishing.

☐ You can apply a light coat of furniture polish to the wood for additional protection and enhanced beauty. Cover small scratches with a light application of shoe polish.

☐ You do not need to oil your fan. The motor has permanently-lubricated sealed ball bearings.

14 Troubleshooting

Problem	Solution
The fan will not start.	☐ Check the main and branch circuit fuses or breakers. ☐ Check the line wire connections to the fan and switch wire connections in the switch housing.
The fan is noisy.	☐ Ensure all motor housing screws are snug. ☐ Ensure the screws that attach the fan blade bracket to the motor hub are tight. ☐ Ensure the wire nut connetions are not ratting against each other or the interior wall of the switch housing. ☐ Allow a 24-hour "breaking in" period. Most noises associated with a new fan disappear during this time. ☐ If you are using the Ceiling Fan light kit,ensure the screws securing the glassware are tight.Check that the light ☐ bulbs are also secure. ☐ Ensure the canopy is a short distance from the ceiling.It should not touch the ceiling. ☐ Ensure your outlet box is secure and rubber isolator pads wereused between the mounting plate and outlet box.
The fan wobbles.	☐ Please follow NO. 12 fan balance（page11）